TheKickPlateStore

Diamond Plate Aluminum Kick Plate

10" x 30"

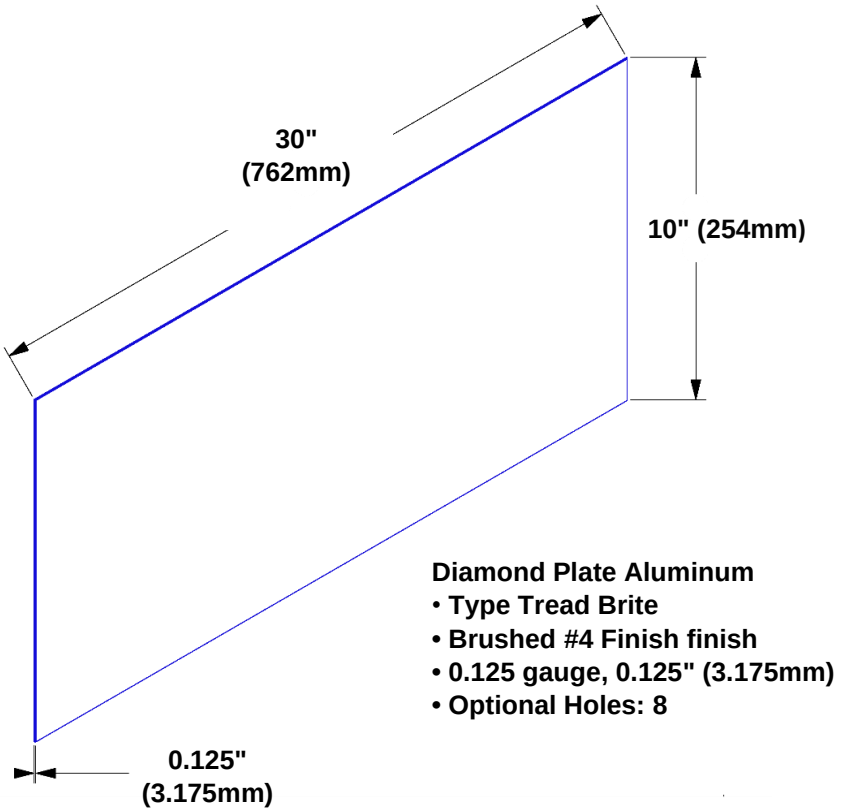

Diamond Plate Aluminum
- **Type Tread Brite**
- **Brushed #4 Finish finish**
- **0.125 gauge, 0.125" (3.175mm)**
- **Optional Holes: 8**

Features:
- Custom sizes Available
- Type

Finishes:
- Brushed #4
- Mirror Polished #8 optional

Mounting Options:
- Adhesive:
  - Construction adhesive supplied separate
- Drillied:
  - Clearance holes for 1 1/8" #8 fastener wood screw
- Magnetic:
  - Metal doors only

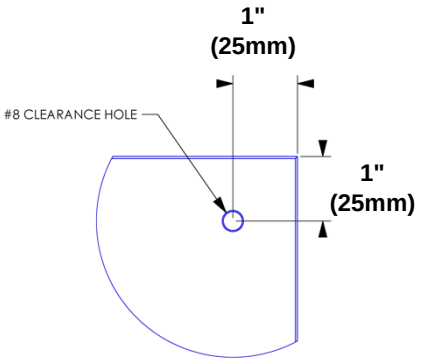

# of Holes	Kick Plate Size
6	6x24 to 16x24
8	24x24, 6x32 to 16x32, 6x48 to 16x48
10	24x32 to 24x48, 24x32, 24x48
12	32x32 to 48x48

Dimensions are specified as Width x Height

Optional Drilling

Beveled Edge Option
Includes chamfered left, top and right edges custom configurations of beveled edges are available upon request.

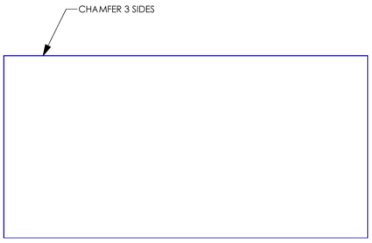

Elevation

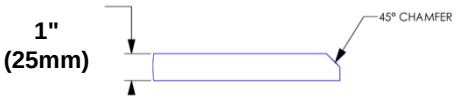

Section At Beveled Edge

Optional Beveling

THEKICKPLATESTORE
DOOR AND WALL PROTECTION WAREHOUSE
Tel: 800-516-4036 TheKickPlateStore.com
Fax: 952-303-3773 sales@thekickplatestore.com