TheKickPlateStore.com

Complete Documentation Package

AP-SS4-183234 | 32in x 34in - 18ga, Brushed, Stainless Steel Armor Plates

Product

Kick Plate
32in x 34in - 18ga, Brushed, Stainless Steel Armor Plates

Specifications

Specification	
Product	Kick Plate
Duty	Light
Gauge	18
Finish	Brushed
Material	Stainless Steel
Height	32"
Width	34"
Lead Time	Std Lead Time: Approx 7-10 bus. days until shipment Large QTY Lead Time: Approx 8-12 bus. days until shipment Options may increase lead time
Options available	Basic - Adhesive Not Supplied, Basic - Adhesive Not Supplied - Beveled 3 Sides, Basic - Adhesive Not Supplied - Beveled 4 Sides, CounterSunk Holes & Screws, CounterSunk Holes & Screws - Beveled 3 Sides, CounterSunk Holes & Screws - Beveled 4 Sides, CounterSunk Holes & Security Screws, CounterSunk Holes & Security Screws - Beveled 3 Sides, CounterSunk Holes & Security Screws - Beveled 4 Sides, Holes & Buttonhead Screws, Holes & Buttonhead Screws - Beveled 3 Sides, Holes & Buttonhead Screws - Beveled 4 Sides, Holes & Buttonhead Security Screws, Holes & Buttonhead Security Screws - Beveled 3 Sides, Holes & Buttonhead Security Screws - Beveled 4 Sides

Included Documents

Document	Page
Drawing	2
Suggested Specifications	3
KickPlate Installation	5
TheKickPlateStore Warranty	7

Pricing is shown on the product page; quantity pricing is available on request.

TheKickPlateStore

Stainless Steel Kick Plate

32" x 34"

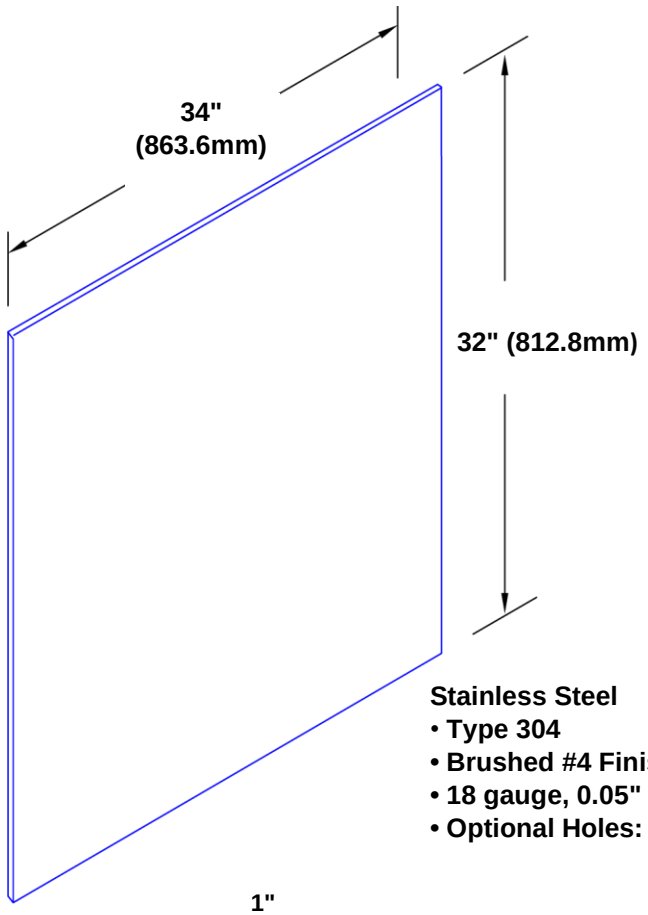

Stainless Steel
- **Type 304**
- **Brushed #4 Finish finish**
- **18 gauge, 0.05" (457.2mm)**
- **Optional Holes: 10**

Features:
- Custom sizes Available
- Type

Finishes:
- Brushed #4
- Mirror Polished #8 optional

Mounting Options:
- Adhesive:
  - Construction adhesive supplied separate
- Drillied:
  - Clearance holes for 1 1/8" #8 fastener wood screw
- Magnetic:
  - Metal doors only

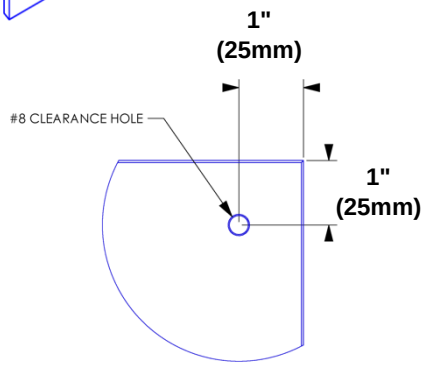

# of Holes	Kick Plate Size
6	6x24 to 16x24
8	24x24, 6x32 to 16x32, 6x48 to 16x48
10	24x32 to 24x48, 24x32, 24x48
12	32x32 to 48x48

Dimensions are specified as Width x Height

Optional Drilling

Beveled Edge Option
Includes chamfered left, top and right edges custom configurations of beveled edges are available upon request.

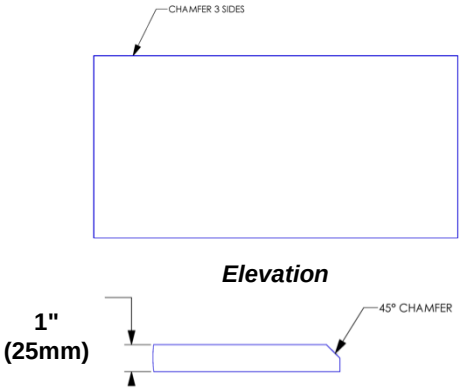

Optional Beveling

THEKICKPLATESTORE
DOOR AND WALL PROTECTION WAREHOUSE

Tel: 800-516-4036 TheKickPlateStore.com
Fax: 952-303-3773 sales@thekickplatestore.com

THEKICKPLATESTORE
SUGGESTED SPECIFICATIONS - SECTION 10 26 13
MODEL AP-SS4-183234-SA
32" x 34" - STAINLESS STEEL ARMOR PLATE

Part 1 - GENERAL

1.01 SUMMARY

A. This section includes the following types of wall protection systems:

1. Kickplates for door protection

1.02 REFERENCES

A. American Society for Testing and Materials (ASTM)

1.03 SUBMITTALS

A. General: Submit the following in accordance with conditions of contract and Division 1 specification section 01 33 00 “Submittal Procedures”.

B. Product data and detailed specifications for each system component and installation accessory required, including installation methods for each type of substrate.

C. Shop drawings showing locations, extent and installation details of kickplates. Show methods of attachment to adjoining construction.

D. Samples for verification purposes: Submit the following samples, as proposed for this work, for verification of guard.

E. Product test reports from a qualified independent testing laboratory showing compliance of each component with requirements indicated.

F. Maintenance data for wall protection system components for inclusion in the operating and maintenance manuals specified in Division 1.

1.04 DELIVERY, STORAGE AND HANDLING

A. Deliver materials to the project site in unopened original factory packaging clearly labeled to show manufacturer.

B. Inspect materials at delivery to assure that specified products have been received.

C. Material must be stored flat in original packaging in a climate controlled location away from direct sunlight.

D. Handling: Take adequate measure to prevent damage to materials.

1.05 PROJECT CONDITIONS

A. Environmental Requirements: Products must be installed in an interior climate controlled environment.

1.06 WARRANTY

A. Standard TheKickPlateStore Limited Lifetime Warranty against material and manufacturing defects.

Part 2 - PRODUCTS

2.01 MANUFACTURER

A. TheKickPlateStore
11445 E Via Linda, Suite 2323, Scottsdale, AZ 85259
Tel: 800-516-4036 Fax: 952-303-3773
sales@TheKickPlateStore.com

B. Substitutions: Not permitted

C. Provide all Stainless Steel Kickplates and wall protection from a single source.

2.02 DESCRIPTION

A. Model: **AP-SS4-183234-SA** | 32" (812.8mm) x 34" (863.6mm) Surface mounted stainless steel armor plate. Use construction adhesive for standard installation. Available pre-drilled or pre-drilled and countersunk for use with mechanical fasteners. Custom sizes are available.

2.03 MATERIALS

A. Stainless Steel: Type 304, 18 gauge, with a Brushed #4 Finish finish.

B. Adhesive: Polyurethane based construction adhesive.

2.04 FABRICATION

A. Kick Plates shall be factory formed from stainless steel sheet.

1. Edge burrs shall be removed.
2. Satin finish grain oriented parallel with length.
3. Optional beveled edge will have a 45° chamfer on 1 to 3 sides, dimension .030

2.05 ACCESSORIES

A. Mechanical Fasteners:

1. For Optional Pre-drilled Holes: Stainless steel #8 x 1 1/4" Philips oval head wood screw with stainless steel cup washer.
2. For Optional Pre-drilled and Countersunk Holes: Stainless steel #8 x 1 1/4" Philips oval head wood screw.
3. Tamper resistant fasteners available.

Part 3 - EXECUTION

3.01 EXAMINATION

A. Verification of conditions: Examine areas and conditions under which work is to be performed and identify conditions detrimental to proper or timely completion.

1. Do not proceed until unsatisfactory conditions have been corrected.

3.02 PREPARATION

A. Surface preparation: Prior to installation, clean substrate to remove dirt, debris and loose particles. Perform additional preparation procedures as required by manufacturer's instructions.

B. Protection: Take all necessary steps to prevent damage to material during installation as required in manufacturer's installation instructions.

3.03 INSTALLATION

A. Install the work of this section in strict accordance with the manufacturer's recommendations, using only approved mounting hardware, and locating all components firmly into position, level and plumb.

3.04 CLEANING

A. General: Immediately upon completion of installation, clean material in accordance with manufacturer's recommended cleaning method.

B. Remove surplus materials, rubbish and debris resulting from installation as work progresses and upon completion of work.

3.05 Protection

A. Protect installed materials to prevent damage by other trades. Use materials that may be easily removed without leaving residue or permanent stains.

KickPlate Storage & Handling, Preparation, Installation, & Cleaning Procedures

STORAGE & HANDLING:

1. Within 72 hours after delivery, inspect the product for any defects. If the item has a defect, please notify TheKickPlateStore by providing an order number, quantity damaged, and photos of the damaged product. If the package is damaged at the time of delivery, review our *Shipping & Returns* policy.
2. Store the finished kick plates in a clean and dry area. The material must reach 65° F. min to 75° F. max 24 hours prior to installation.

INSTALLATION PREPARATION:

1. Ensure that the wall surface is dry, clean, and free of any dust, dirt, loose paint, wax, oil, or grease by wiping with a solvent.

INSTALLATION USING ADHESIVE:

1. Apply a bead of heavy-duty construction adhesive (i.e.: Liquid Nails) using a zig-zag pattern over the back of the kickplate. The bead width should be approximately 1/4in thick.
2. Position the plate on the door/wall and apply pressure until a tight fit is achieved. Ensure the plate is level and at the correct height prior to applying pressure.
3. Once the plate has been installed, remove the protective covering. Please note the brushed aluminum plates will not have a protective covering.

INSTALLATION USING SCREWS:

1. Position the plate on the door/wall at the desired location and mark the hole locations on the wall. Ensure the plate is level and at the correct height prior to applying pressure.
2. Drill screw holes at each mark made on the wall.
3. Clean the wall to remove any dust or plaster.
4. Position the plate back on the door/wall at the desired location and attach the wall using the factory-supplied screws.
5. Once the plate has been installed, remove the protective covering. Please note the brushed aluminum plates will not have a protective covering.

Tel: 800-516-4036
Fax: 952-303-3773
TheKickPlateStore.com
sales@thekickplatestore.com

CLEANING INSTRUCTIONS:

- For basic cleaning, including fingerprints, use warm water with a mild soap or an organic solvent (e.g., Acetone, alcohol, methylated spirits), sponge rinse with clean water, and wipe dry following the polish lines.
- For more difficult stains and grease use an organic solvent, mild cleaning, or specialty stainless steel cleaners. Use a sponge, rag, or soft fiber brush to clean, rinse well with a sponge and clean water and wipe dry following the polish lines. Always follow the instructions on all cleaning products prior to use.
- We do not recommend the use of any cleaners, such as Ajax or Comet, containing abrasive components that may scratch and/or leave a powdery residue.

CAUTION:

- DO NOT walk on the kickplates.
- DO NOT store anything on top of the kickplates.

Tel: 800-516-4036
Fax: 952-303-3773
TheKickPlateStore.com
sales@thekickplatestore.com

THEKICKPLATESTORE.COM

Limited Warranty

Quippini, LLC dba TheKickPlateStore.com (“TheKickPlateStore,” “we,” “our”) warrants that the products we sell will be free from defects in material and workmanship when properly installed and used in accordance with the product's intended application and our recommended installation instructions. The length of coverage varies by product category and manufacturer, as described below.

This warranty extends only to the original purchaser and is not transferable. Proof of purchase (order number or invoice) is required for all claims.

Coverage by Product Category

Coverage Period	Products Covered
Lifetime	Stainless steel, solid brass, bronze, and aluminum kick plates, mop plates, stretcher plates, armor plates, and push plates — covering the metallic substrate against defects in material and workmanship for the lifetime of the building in which the product is installed.
10 Years	Rigid vinyl (PVC) and high-impact plastic kick plates, against defects in material and workmanship and against color fade beyond industry-standard tolerances when used in indoor applications.
5 Years	Painted and powder-coated finishes on metallic substrates, anti-microbial coatings, and specialty surface treatments, against defects in material and workmanship.
1 Year	Self-adhesive bonds (the adhesive layer on any self-stick product) and decorative films.

Manufacturer Coverage Alignment

For products manufactured by a third party, our coverage runs concurrently with, and does not exceed, the manufacturer's own published warranty. Where the manufacturer provides a shorter period than the tier above, the manufacturer's warranty governs. The current published terms for our major manufacturers are:

Manufacturer	Warranty Terms
InPro Corporation (IPC)	Limited Lifetime against defects in material and workmanship on Palladium® kickplates, door protection, and related wall protection products. Products must be installed in an interior climate-controlled environment.
Construction Specialties (CS Group) — Acrovyn®	Limited Lifetime against defects in material and workmanship **when installed using CS System Accessories and Assemblies** (CS-supplied adhesives, primer, trims, caulk, fasteners, and brackets). When installed without CS System Accessories and Assemblies, coverage is 5 years on material defects.
Pawling Corporation	5 years from date of shipment against defects in materials under proper use and service.
Other manufacturers	Coverage matches the manufacturer's published warranty for their products. Warranty documents from specific manufacturers are available on request.

For kick plates and related hardware that TheKickPlateStore fabricates from raw metallic stock (stainless steel, brass, bronze, aluminum), coverage follows the product-category tiers above and is not subject to a third-party manufacturer warranty.

What We'll Do

If a covered product fails to meet this warranty, we will, at our option, replace the defective product at no charge. Replacement includes standard ground shipping within the United States and Canada. We will not be responsible for:

- Labor or installation costs for removing the original product or installing the replacement
- Costs to access the product (for example, door removal, hardware replacement, or re-finishing of the surrounding door)
- Any incidental, consequential, or indirect damages of any kind

What's Not Covered

This warranty does not cover damage or failure caused by:

- Impact exceeding the product's published design criteria, vandalism, or abuse
- Installation that does not follow our recommended instructions or the manufacturer's instructions, including use of fasteners, adhesives, or substrates other than those specified
- Modification or alteration of the product after purchase (including cutting, drilling, or bending the plate)
- Exposure to chemicals, cleaners, or environmental conditions outside the product's rated application (for example, using an interior-rated product outdoors, or exposure to solvents, acids, or abrasive cleaners)
- Installation in an environment outside the manufacturer's specified temperature and humidity range
- UV degradation or color fade on products not rated for direct sunlight
- Normal wear, scratches, scuffs, dents, and cosmetic changes consistent with ordinary use
- Failure of the door or substrate to which a self-adhesive product was applied (for example, paint delamination, surface contamination, or improper surface preparation preventing adhesion)
- Products that have been discontinued by the manufacturer
- Products used for purposes other than their intended application
- Accidents, acts of God, and other occurrences beyond our or the manufacturer's control, including fire, flood, and civil unrest

How to File a Claim

To file a warranty claim, please email sales@TheKickPlateStore.com or use our Contact Us page, and include:

- Your order number or a copy of your invoice
- The product SKU and quantity affected
- A description of the defect or failure
- Clear photos showing the defect and the installation context
- Installation date and a brief description of the installation method (fasteners and/or adhesive used)

We will acknowledge your claim within three business days and work to resolve it promptly. In most cases we can assess a claim from photos and documentation; in some cases we may request that the product (or a sample) be returned for inspection, or that the manufacturer's field representative examine the installation.

Definitions

- **Lifetime** means the usable life of the building in which the product is installed, subject to the exclusions and conditions of this warranty.
- **Original purchaser** means the person or entity that purchased the product directly from TheKickPlateStore.com. This warranty is not transferable to subsequent owners or tenants.
- **Properly installed** means installed using the fasteners, adhesives, substrates, and methods specified in the product's installation instructions, or, where those instructions are silent, using methods consistent with generally accepted construction practice.
- **CS System Accessories and Assemblies** means CS-supplied adhesives, primer, trims, caulk, fasteners, and brackets required for Acrovyn's full Limited Lifetime coverage per Construction Specialties' warranty terms.

Limitation of Liability

THIS WARRANTY IS IN LIEU OF ALL OTHER WARRANTIES, EXPRESS OR IMPLIED, INCLUDING BUT NOT LIMITED TO ANY IMPLIED WARRANTY OF MERCHANTABILITY OR FITNESS FOR A PARTICULAR PURPOSE. OUR LIABILITY UNDER THIS LIMITED WARRANTY IS LIMITED TO REPLACEMENT OF THE DEFECTIVE PRODUCT AS SET FORTH ABOVE AND DOES NOT INCLUDE ANY RESPONSIBILITY FOR INCIDENTAL OR CONSEQUENTIAL DAMAGES OF ANY KIND. SOME STATES DO NOT ALLOW THE EXCLUSION OR LIMITATION OF INCIDENTAL OR CONSEQUENTIAL DAMAGES, SO THIS LIMITATION MAY NOT APPLY TO YOU.

Orders Placed Before April 23, 2026

If you purchased a product from TheKickPlateStore.com before April 23, 2026, the warranty terms in effect on the date of your purchase continue to apply to that order. This revised policy applies only to orders placed on or after April 23, 2026.

Quippini, LLC dba TheKickPlateStore.com

11445 E Via Linda, Suite 2323
Scottsdale, AZ 85259

Phone: (800) 516-4036 • Email: sales@TheKickPlateStore.com • Web: TheKickPlateStore.com

Effective April 23, 2026